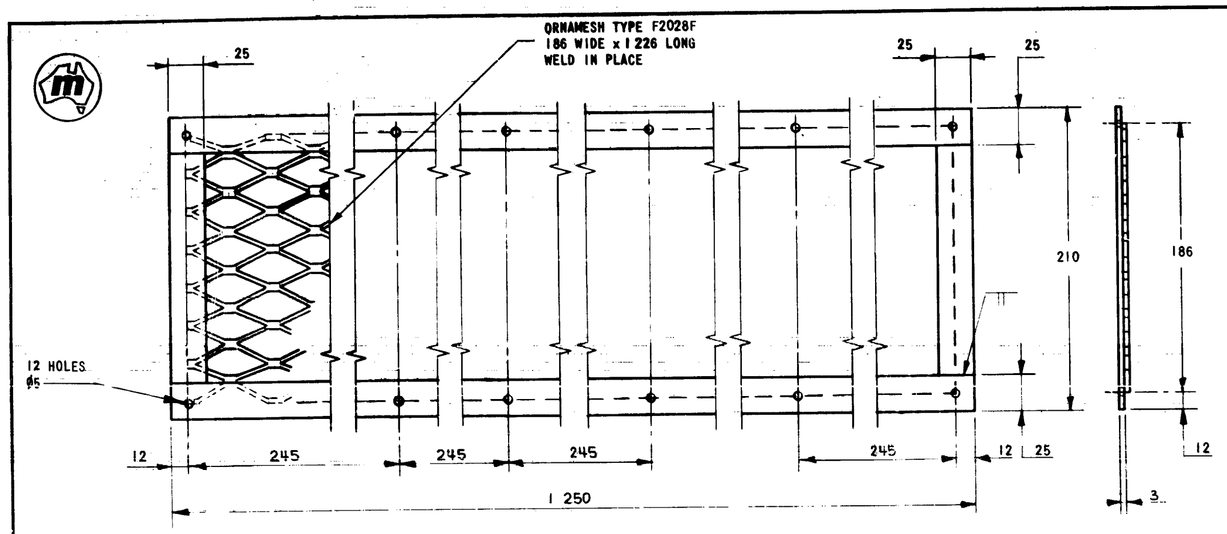
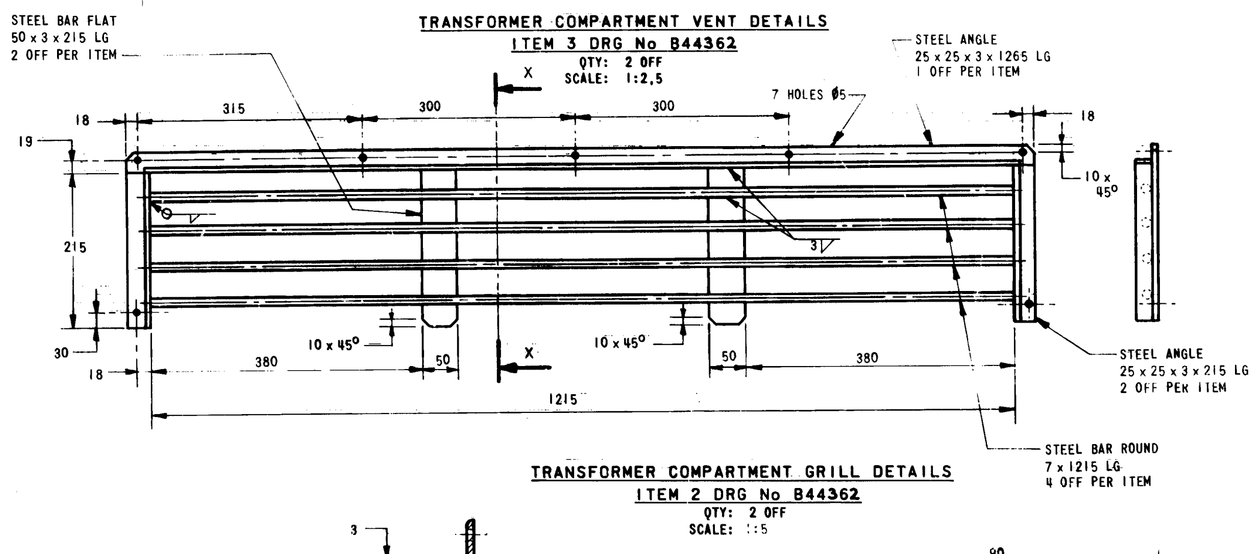
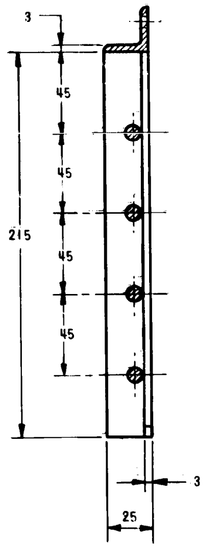


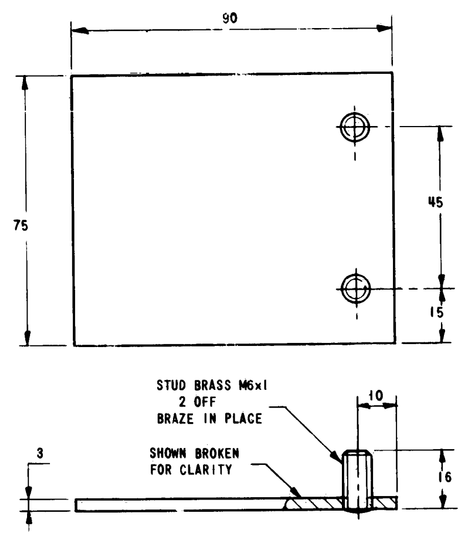
TRANSFORMER COMPARTMENT VENT DETAILS
ITEM 3 DRG No B44362
QTY: 2 OFF
SCALE: 1:2,5



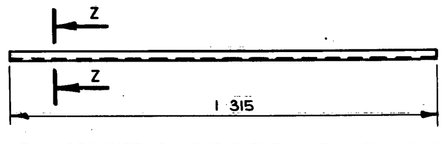
TRANSFORMER COMPARTMENT GRILL DETAILS
ITEM 2 DRG No B44362
QTY: 2 OFF
SCALE: 1:5



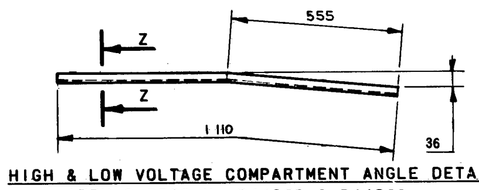
SECTION X-X
SCALE 1:2



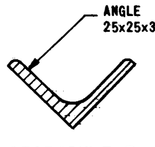
BOTTOM MULLION STUD ANCHOR PLATE DETAILS
ITEM 3 DRG No D44338
QTY: 2 OFF



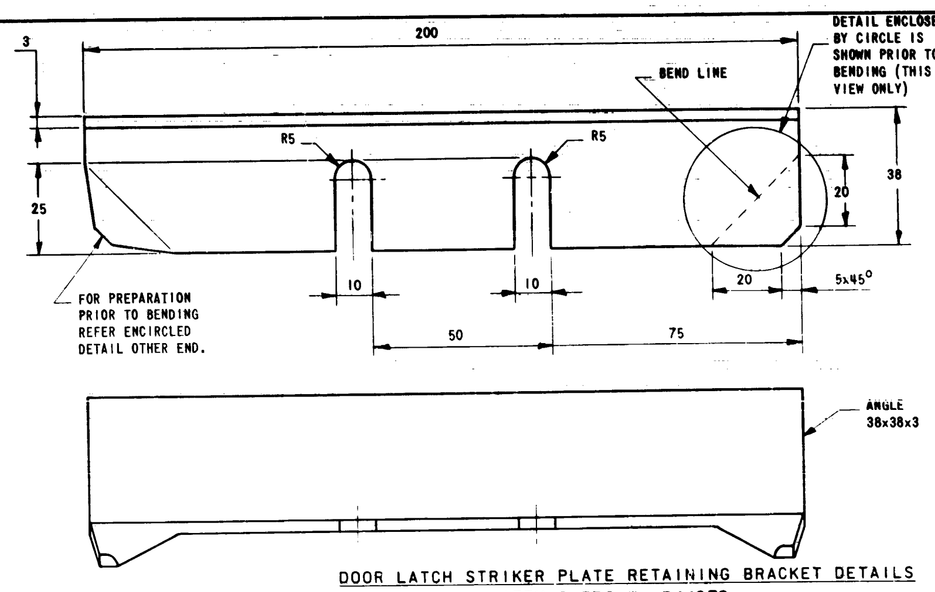
TRANSFORMER COMPARTMENT ANGLE DETAILS
ITEM 5 DRG No B44362
QTY: 4 OFF
SCALE: 1:10



HIGH & LOW VOLTAGE COMPARTMENT ANGLE DETAILS
ITEM 2 DRGS No B44363 & B44364
QTY: 7 OFF
SCALE: NONE

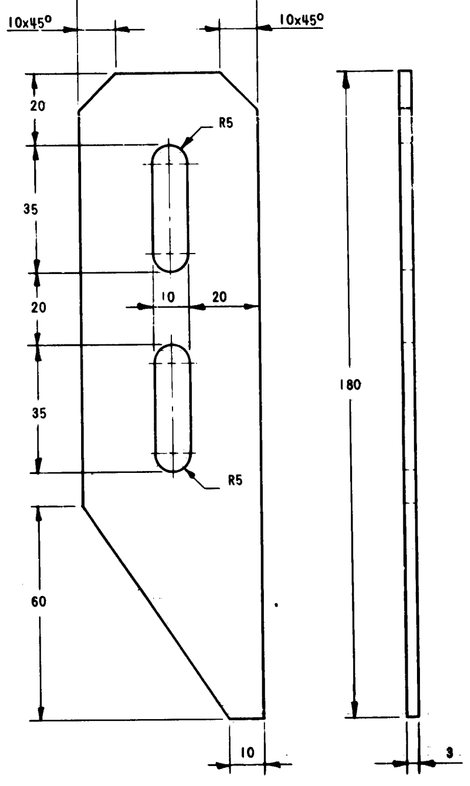


SECTION Z-Z

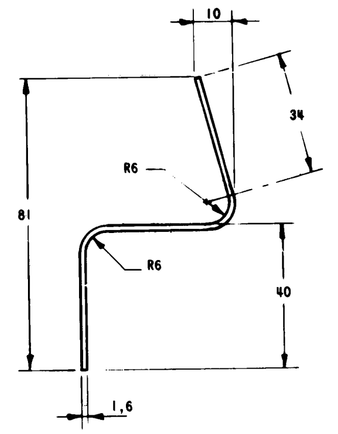


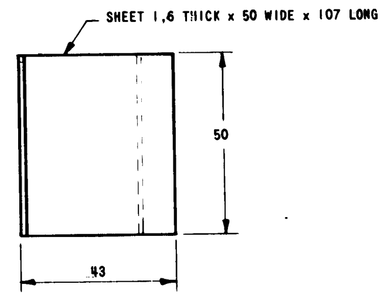
DOOR LATCH STRIKER PLATE RETAINING BRACKET DETAILS
ITEM 9 DRG No B44359
QTY: 3 OFF

DOOR LATCH STRIKER PLATE DETAILS
ITEM 8 DRG No B44359
QTY: 3 OFF

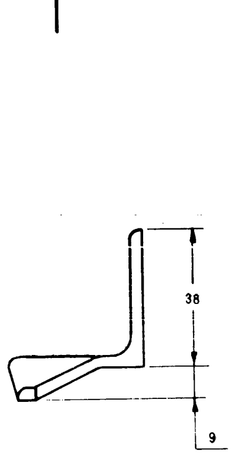


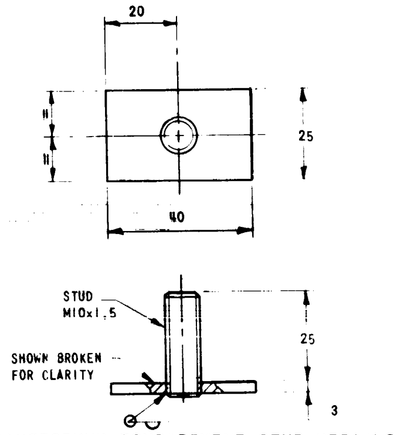
DOOR LOWER SECURITY PLATE DETAILS
ITEM 6 DRG No B44359
QTY: .6 OFF



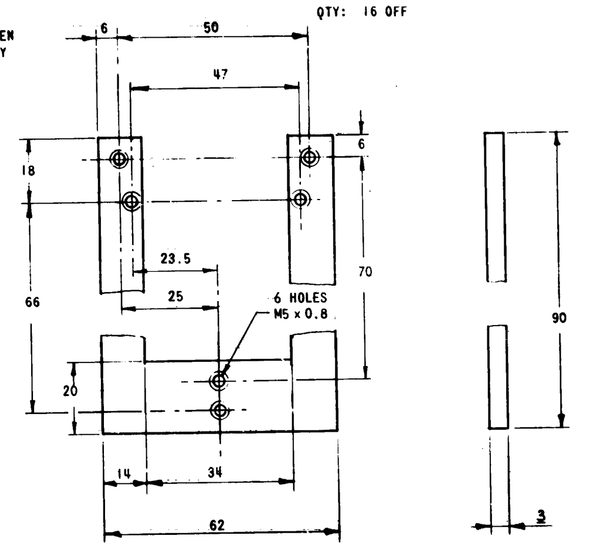


DOOR RUBBING PLATE DETAILS
ITEM 7 DRG No B44359
QTY: 6 OFF

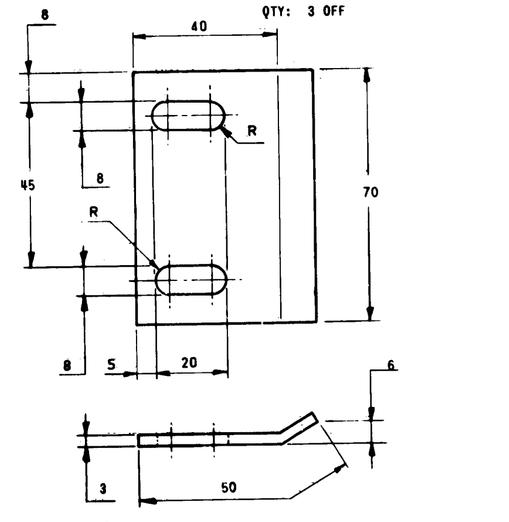




TRANSFORMER COMPARTMENT STUD DETAILS
ITEM 4 DRG No B44362
QTY: 16 OFF



DOOR BACKSET CASE RETAINING PLATE DETAILS
ITEM 10 DRG No B44359
QTY: 3 OFF



BOTTOM MULLION CLAMP PLATE DETAILS
ITEM 4 DRG No D44338
QTY: 2 OFF

NOTES
1. ALL MATERIAL TO BE STEEL EXCEPT WHERE OTHERWISE SHOWN.
2. ALL ITEMS TO BE HOT DIP GALVANISED AFTER FABRICATION.
3. QUANTITY OF ITEMS SHOWN IS SUFFICIENT FOR 1 COMPLETE CUBICLE ONLY.
4. WELD SYMBOLS COMPLY WITH AS 1101, PART 3.

DIMENSIONS IN MILLIMETRES

AMENDMENTS			
A	ORIGINAL PRINT ISSUE	DRN	12.81
B	DRG No B44373	CHD	12.81
C	TRANSFORMER COMPARTMENT STEEL WORK RADIO TO SUIT 2 WAY RADIO TO SUIT 4 WAY 240 STATION 240 DRAWING	DRN	MJC 1.82
		CHD	SGP 1.82
D	ITEM 10 CHANGED TO SUIT LOCKWOOD 6 GANG BACKSETS (CHANGE 1 HOLE LOCKWOOD ONLY)	DRN	MJC 5.86
		CHD	SGP 5.86
		DES	M.J.H. 11.86
	FROM NOV 86	M.S.D.	

OFFICER	INITIALS	OFFICER	INITIALS
S.O. ENG.		CONS. ENG.	
PLAN ENG.		M. & P. ENG.	
SUB. ENG.		MAINS ENG.	
DIST. ENG.		DESIGNED	

PROSPECT COUNTY COUNCIL

PADMOUNT SUBSTATION
FIBREGLASS CUBICLE SIZE 10
STEELWORK DETAILS

REFERENCE DRAWINGS A4(D)

SCALE 1:1 OR AS SHOWN

APPROVED	DRAWN	SGP	CHIEF ELECT. ENG.	DATE 1-2-80
	CHKD			
	OFF. IN CH.		B 44373 A	
			SHEET No B C D	OF SHEETS