AMENDMENTS		
A	ORIGINAL ISSUE	
B	DR'N	VOTTA
	CH'D	B.H.
	DATE	17.3.2009
	JR No	- -
	REDRAWN. TITLE MODIFIED.	
C	M.A.E.	W.I.
	DR'N	BIB
	CH'D	D.H.
	DATE	12.4.2010
	JR No	- -
	CHANGES TO DRAWING FRAME.	
D	M.A.E.	J.P.
	DR'N	B.M
	CH'D	E.W
	DATE	23-06-25
	JR No	- -
	CHANGED STOCKCODE TO MATERIAL No.	
	M.A.E.	K.S

NOTES:

1. ALL STEEL PLATES TO CONFORM TO AS 3678 GRADE 250 U.O.N.
2. ALL STEEL BARS AND SECTIONS TO CONFORM TO AS 3679 GRADE 250 U.O.N. TO AS 1554, PART 1, CATEGORY G.P. U.O.N.
3. ALL STEEL PIPES TO CONFORM TO AS 1163 GRADE 250 UNO.
4. ALL FILLET WELDS TO BE 6mm CONTINUOUS U.O.N. AND ARE TO CONFORM TO AS 1554, PART 1, CATEGORY G.P. U.N.O.
5. ALL SHARP EDGES AND BURRS TO BE REMOVED.
6. ALL STEEL TO BE FULLY HOT DIP GALVANIZED AFTER FABRICATION IN ACCORDANCE WITH AS 4680.
7. SECTIONS TO BE STAGGERED DURING ASSEMBLY TO PREVENT SEAM WELDS LINING UP.

COLUMN	'H'	"A"	"B"	"C"	"D"	MATERIAL
IE/EB 4.5	4500	75	725	765	700	1000005062
IE/EB 5.5	5500	150	650	690	625	1000005063
IE/EB 7.0	7000	150	650	690	625	1000004904
IE/EB 8.5	8500	150	650	690	625	1000004905
IE/EB 10.0	10000	150	650	690	625	1000004906
IE/EB 11.5	11500	150	650	690	625	-

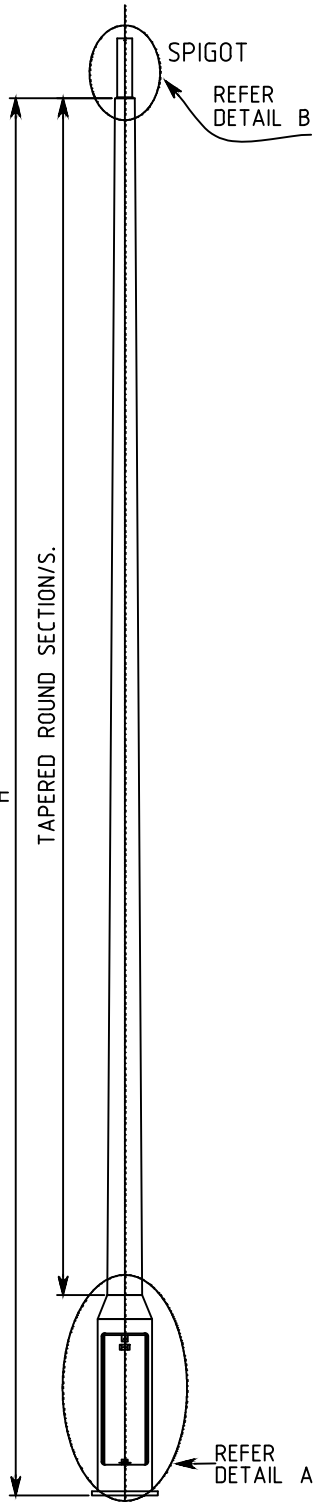

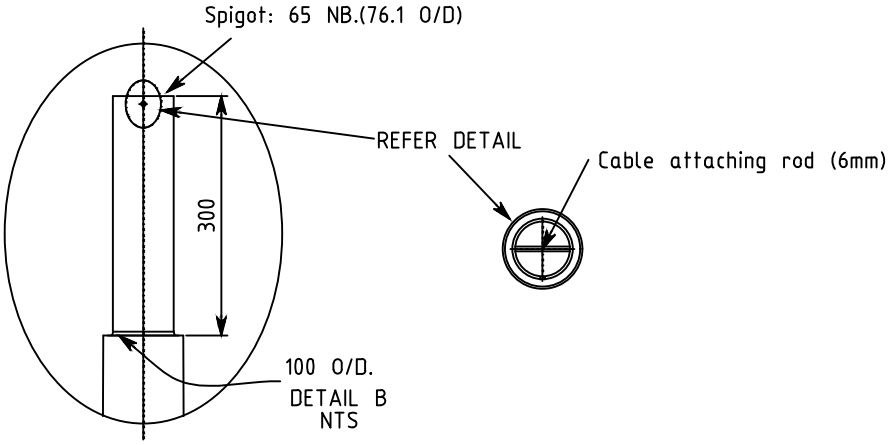

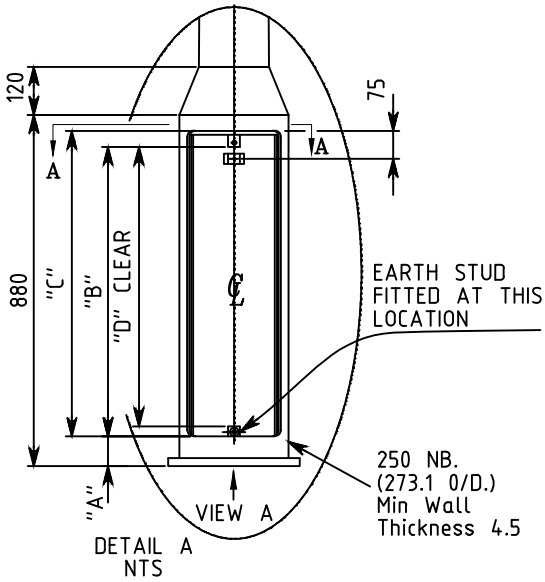

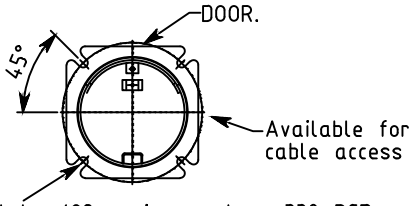

VIEW IN DIRECTION OF ARROW 'A'

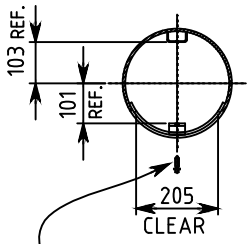

SECTION A-A
NTS

M10x30 door fixing screw (Square head)

ORIGINAL SCALE		APPROVED BH	
DRAWN	PW	-	-
DATE	11.4.01	-	-
CH'D	PA	-	-

©This drawing and the copyright therein is the property of Endeavour Energy and may not be copied, reproduced, distributed, loaned or used without the written consent of Endeavour Energy.

Endeavour Energy

REFERENCE DRAWINGS

DO NOT SCALE
DIMENSIONS IN MILLIMETRES

AUTHORISED
W. Isley
MANAGER ASSET ENGINEERING 11.4.01

ENLARGED BASE COLUMN
GENERAL DETAIL

A4 262714 D

SHEET No 1 OF 1 SHEETS