AMENDMENTS		
A	ORIGINAL ISSUE	
J R No.		NA
B	DR'N	S.F
	CH'D	R.D
	DATE	24-10-24
	JR No	N/A
REPLACED STOCK CODE BY MATERIAL NO.		
EDM		K.S

NOTES

1. MATERIAL: ALUMINIUM.

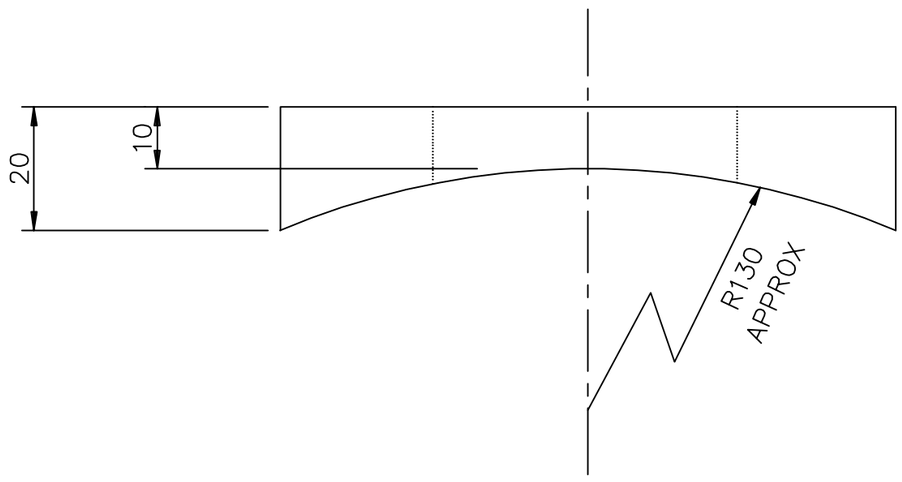

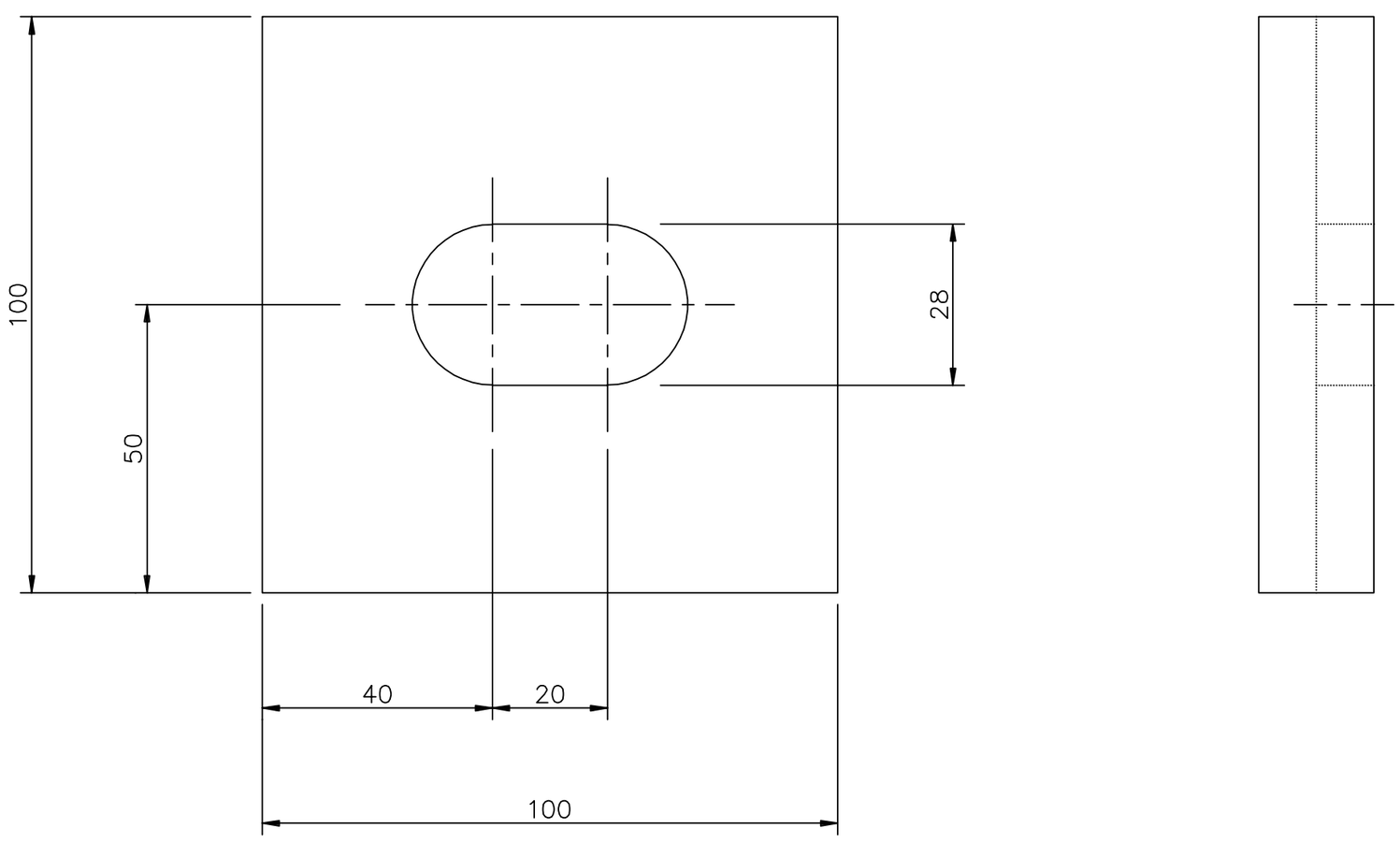

MATERIAL NO. 1000007431

© This drawing and the copyright therein is the property of Endeavour Energy and may not be copied, reproduced, distributed, loaned or used without the written consent of Endeavour Energy.

ORIGINAL SCALE 1:1

APPROVED C.Brown

Endeavour Energy

REFERENCE DRAWINGS

DO NOT SCALE
DIMENSIONS IN MILLIMETRES

AUTHORISED W.Isley

DRAWN	C.R.T.		
DATE	23-4-96		
CH'D	C.R.T.		

CONCRETE POLE
CROSSARM MOUNTING BRACKET
DETAIL

MGR NETWORK MAINS ASSETS 26-09-96

A2P 240379 B

SHEET No 1 OF 1 SHEETS