AMENDMENTS		
A	ORIGINAL ISSUE	
B	DR'N	DC
	CH'D	SD
	DATE	24-07-13
	JR No	N/A
NOTE 3 & ITEM IA026 LABEL AMENDED. HEATSHRINK ADDED TO DIAGRAM.		
OH&UG MM	D.Mate	
C	DR'N	G.S.F.
	CH'D	G.S.F.
	DATE	10-11-14
	JR No	N/A
SHEET 2 ADDED. MORE UGOH OPTIONS SHOWN. SURGE DIVERTER MODIFIED. 3D VIEWS ADDED.		
OH&UG MM	D.Mate	

NOTES

1) A ZERO ANGLE OF LINE DEVIATION IS PREFERED. HOWEVER ANGLES UP TO 20° ARE ACCEPTABLE TO SUIT FIELD CONSTRAINTS (WHEN APPROVED BY ENDEAVOUR ENERGY)

2) OVERHEAD MAINS CONSTRUCTION SHOWN ARE FOR INFORMATION ONLY AND MAY BE CHANGED TO SUIT DESIGN.

3) IF MAINS CANNOT BE INSULATED OR MADE THROUGH THEN CCT SHALL BE INSTALLED TO THE UGOH.

4) EARTHING TO BE IN ACCORDANCE WITH MCI0005 & SDI100.

5) REFER TO DRG 012000 FOR SPECIAL CLEARANCES TO LV.

ITEM	QTY	DESCRIPTION	REMARKS
IA026	1	UGOH DIVERTER WITH DISCONNECT	

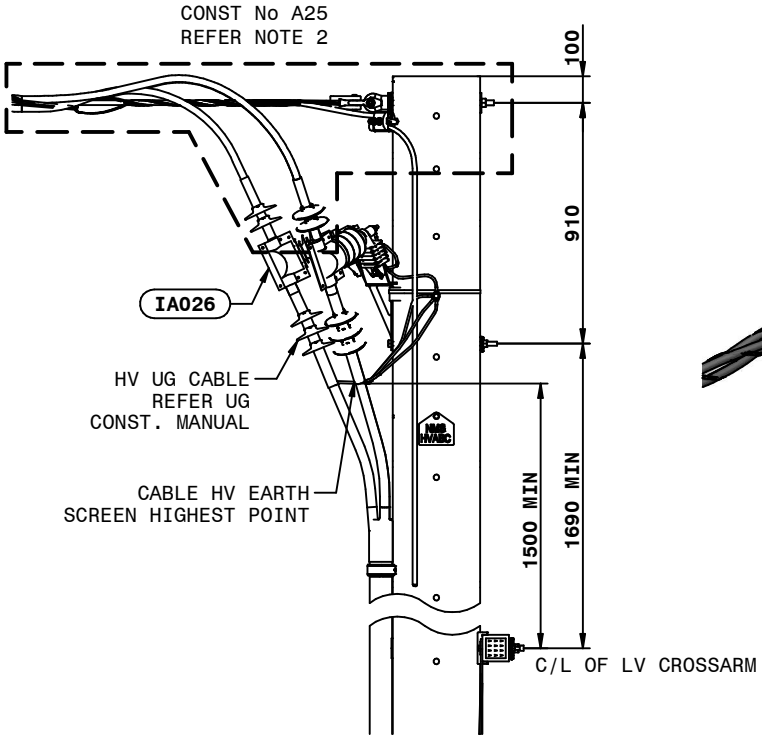

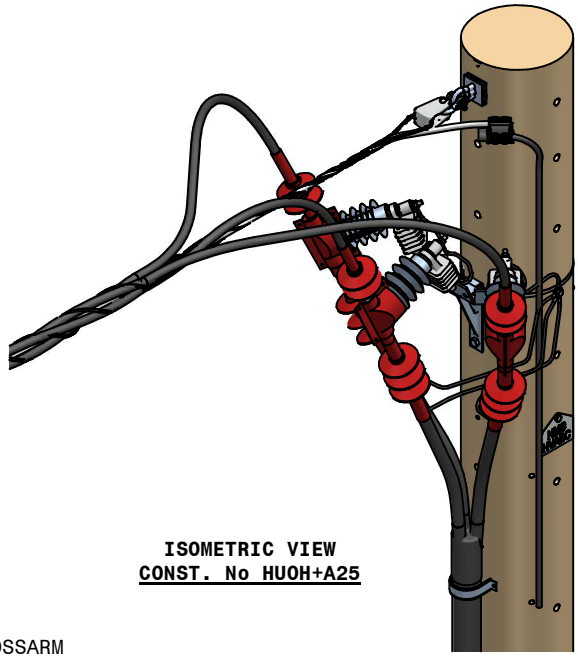

ISOMETRIC VIEW
CONST. No HUOH+A25

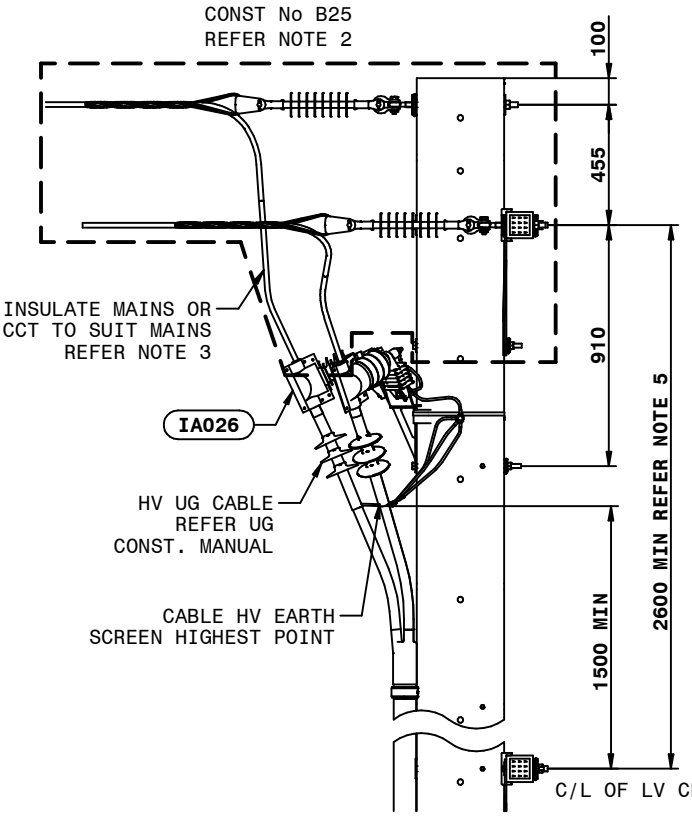

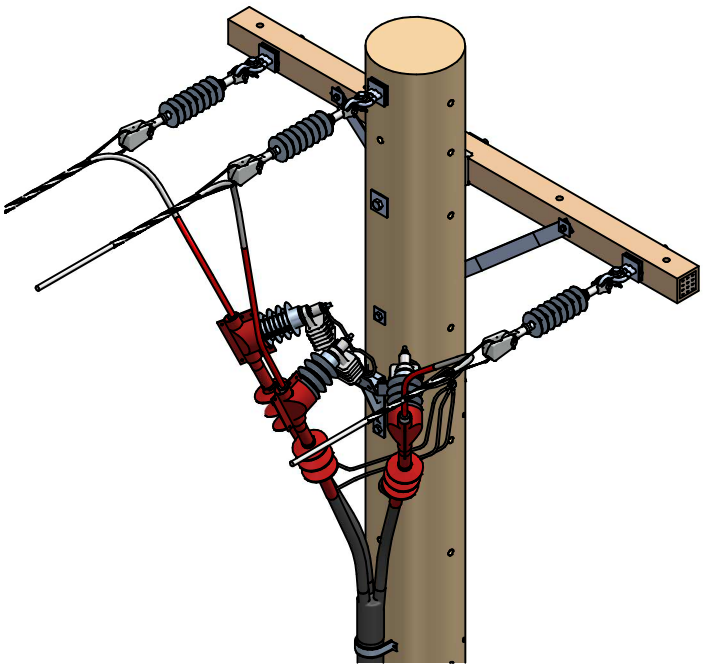

ISOMETRIC VIEW
CONST. No HUGOH+B25

© This drawing and the copyright therein is the property of Endeavour Energy and may not be copied, reproduced, distributed, loaned or used without the written consent of Endeavour Energy.

ORIGINAL SCALE	APPROVED
	G. Ford

DRAWN	G. Ford	
DATE	22/04/09	
CH'D	G. Ford	

Endeavour Energy

REFERENCE DRAWINGS

DO NOT SCALE
DIMENSIONS IN MILLIMETRES

AUTHORISED
W. Isley
MANAGER ASSET ENGINEERING 22/04/09

OVERHEAD 11-22kV CONST. No. HUGOH
TERMINATION TO UNDER GROUND CABLE

A4 332023 C

SHEET No. 1 OF 2

AMENDMENTS		
A	ORIGINAL ISSUE	
B	DR'N	DC
	CH'D	SD
	DATE	24-07-13
	JR No	N/A
NOTE 3 & ITEM IA026 LABEL AMENDED. HEATSHRINK ADDED TO DIAGRAM.		
OH&UG MM		D.Mate
C	DR'N	G.S.F.
	CH'D	G.S.F.
	DATE	10-11-14
	JR No	N/A
SHEET 2 ADDED. MORE UGOH OPTIONS SHOWN. SURGE DIVERTER MODIFIED. 3D VIEWS ADDED.		
OH&UG MM		D.Mate

NOTES

1) UGOH BRACKET BOTTOM BOLT TO BE 1465mm FROM TIP OF POLE. CROSSARM XA020 AND BRACE BA060-750 ALSO REQUIRED.

2) HVABC SUPPORT INSULATOR BRACKET TO BE MOUNTED TO TOP BOLT HOLE (100/150mm DOWN FROM POLE TIP).

3) UGOH BRACKET BOTTOM BOLT TO BE 1920mm FROM TIP OF POLE.

4) EARTHING TO BE IN ACCORDANCE WITH MCI0005 & SDI100.

5) REFER TO DRG 012000 FOR SPECIAL CLEARANCES TO LV.

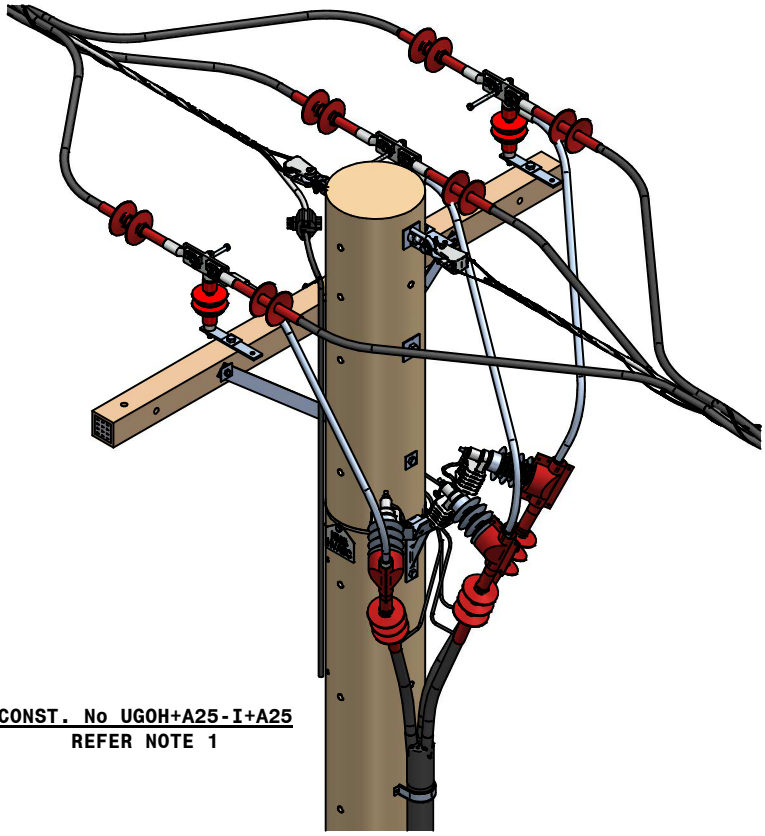

CONST. No UGOH+A25-I+A25
REFER NOTE 1

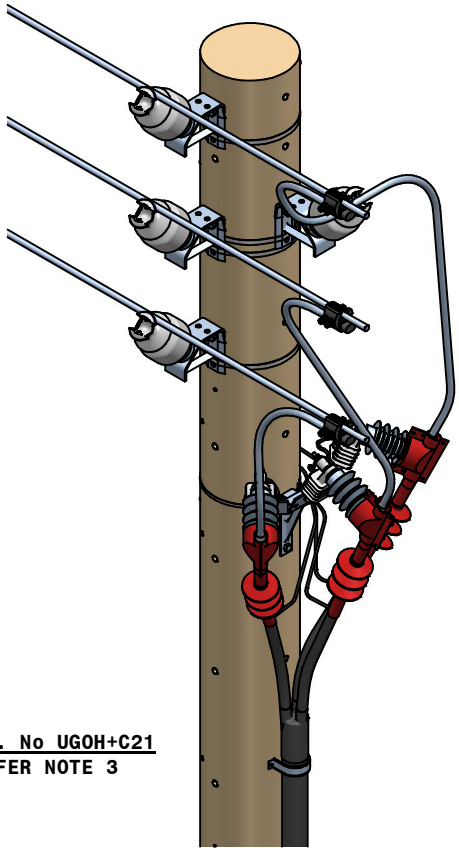

CONST. No UGOH+C21
REFER NOTE 3

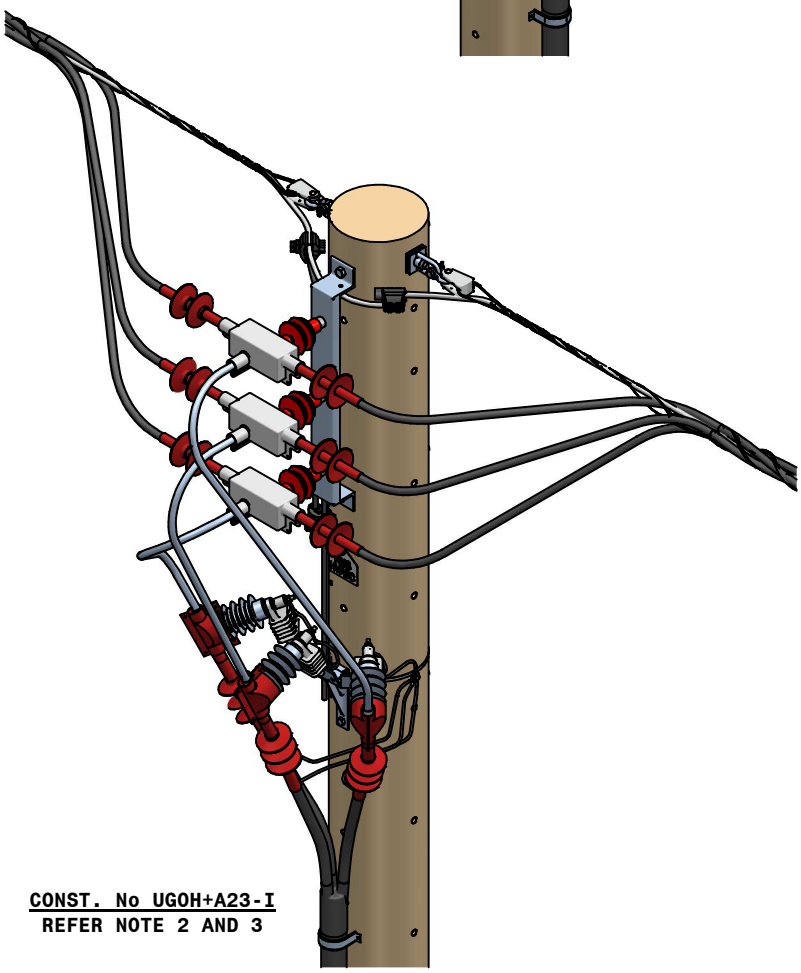

CONST. No UGOH+A23-I
REFER NOTE 2 AND 3

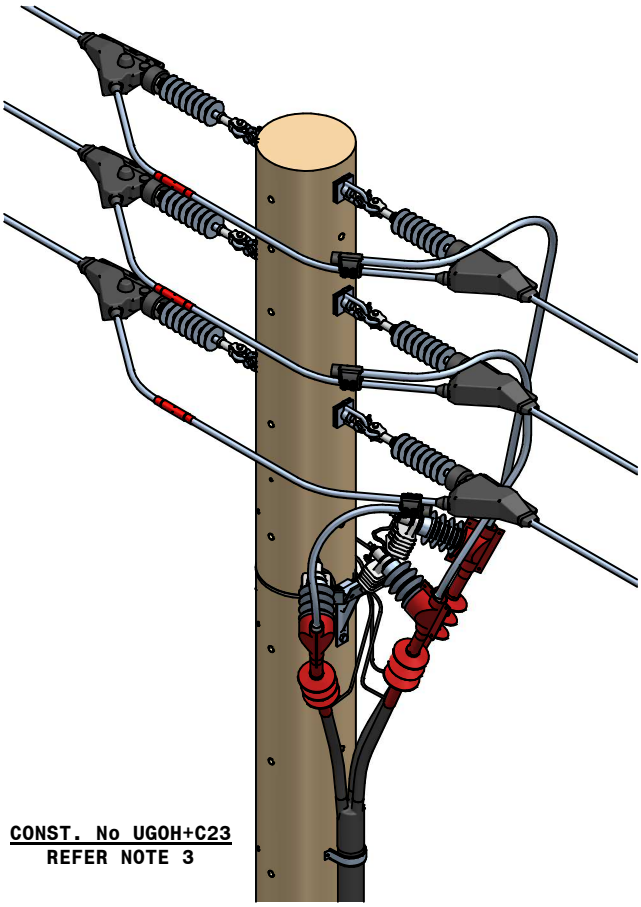

CONST. No UGOH+C23
REFER NOTE 3

© This drawing and the copyright therein is the property of Endeavour Energy and may not be copied, reproduced, distributed, loaned or used without the written consent of Endeavour Energy.

Endeavour Energy

ORIGINAL SCALE	APPROVED	G. Ford
DRAWN	G. Ford	
DATE	22/04/09	
CH'D	G. Ford	

REFERENCE DRAWINGS: - / -

DO NOT SCALE
DIMENSIONS IN MILLIMETRES

AUTHORISED: W. Isley
MANAGER ASSET ENGINEERING 22/04/09

OVERHEAD 11-22kV CONST. No. HUGOH
TERMINATION TO UNDER GROUND CABLE

A4 332023 C

SHEET No. 2 OF 2