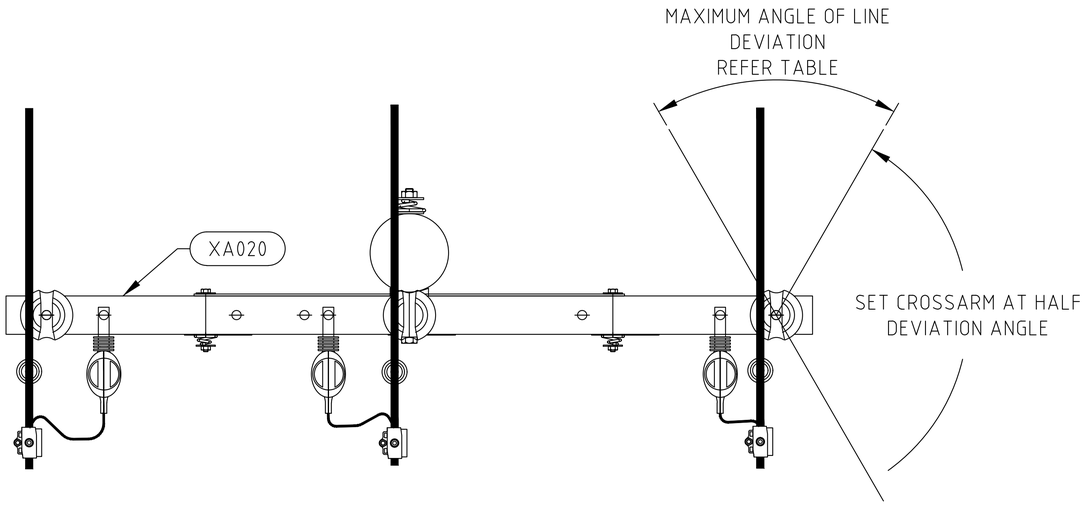

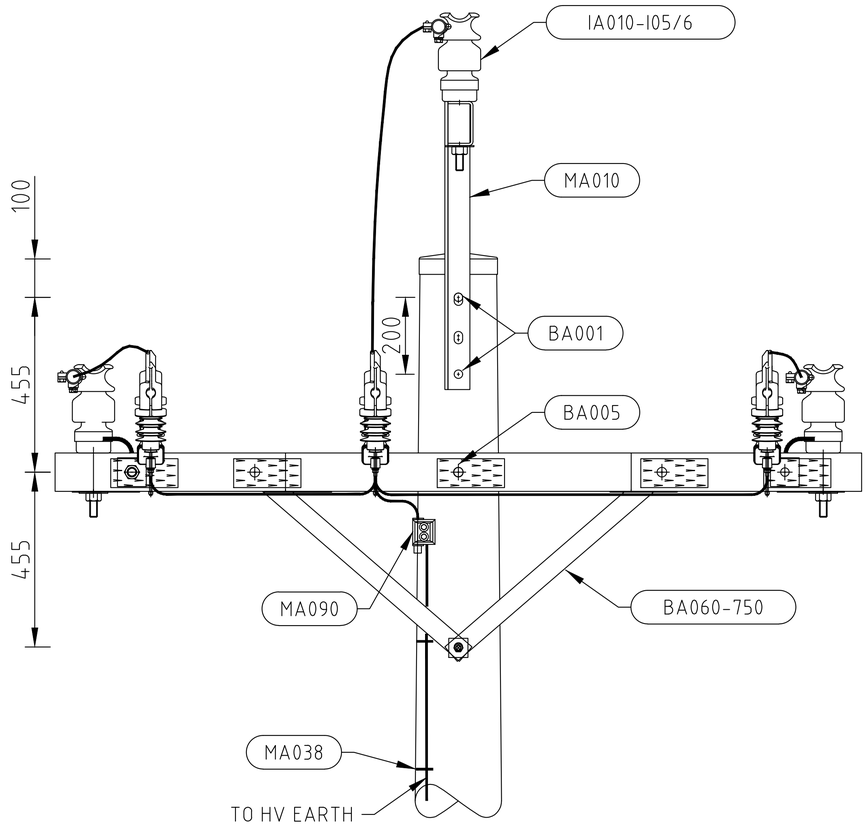

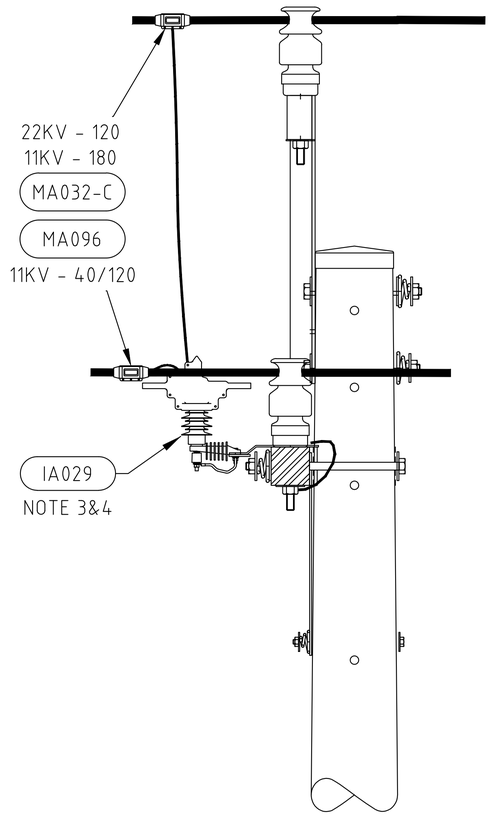

NOTE

1) MAXIMUM SPAN LENGTH IS FOR HV CONSTRUCTION ONLY.
WHEN COMPOSITE CONSTRUCTION IS REQUIRED, LV SPAN MAY LIMIT MAXIMUM SPAN LENGTH.

2) USE PREFORM TIE WITH THE CONDUCTOR POSITIONED ON THE OPPOSITE SIDE TO THE LOAD DIRECTION.

3) IF SURGE ARRESTOR IS REQUIRED USE OPTION C.

4) EARTHING TO BE IN ACCORDANCE WITH EDI006.

ITEM	QTY	DESCRIPTION	REMARKS
BA001	2	BOLT 20MM (POLE)	
BA006	1	BOLT 20MM (POLE+XARM)	
BA060-750	1	BRACE CROSSARM STD 750mm	
IA010-I05/6	3	INS. LONG PIN (CCT 11/22kV)	NOTE 2
MA010	1	BRACKET RAISER 750mm	
XA020	1	CROSSARM HV STD 2100x100x100	
OPTION 'C' - SURGE ARRESTOR			
IA029	3	SURGE ARRESTOR + IPC.	NOTE 3&4
MA038	A/R	CABLE SADDLE/SUPPORT + INS	
MA090	2	IPC INS. TO INS. EARTH CONN.	NOTE 3&4
MA096	3	IPC 11kV 40-120mm^2	11/40-120
MA032-C	3	CLAMP PG 2 BOLT + COVER	22/120,11/180

LIMITS OF CONSTRUCTION				
MAX. ANGLE OF LINE DEVIATION	MAXIMUM CONDUCTOR SIZE - STRINGING TABLE - SPAN LENGTH			
	11kV 80MM CCT	11kV 120MM CCT	11kV 180MM CCT	22kV 120MM CCT
10°	-------	CCT19 -140	CCT24 -100	-------
15°	CCT13 -140	-------	-------	-------
20°	-------	CCT18 -100	-------	CCT08 -100
30°	CCT12 -100	-------	-------	-------
35°	-------	-------	CCT23 -60	-------
50°	-------	CCT17 -60	-------	CCT07 -60
60°	CCT11 -60	-------	-------	-------

© This drawing and the copyright therein is the property of Endeavour Energy and may not be copied, reproduced, distributed, loaned or used without the written consent of Endeavour Energy.

Endeavour Energy

REFERENCE DRAWINGS

DO NOT SCALE
DIMENSIONS IN MILLIMETRES

AUTHORISED/CERTIFIED
W.ISLEY

ORIGINAL SCALE		APPROVED G.FORD	
DESIGNED	G.FORD	DATE	22.04.09
DRAWN	G.FORD		
CHECKED	G.FORD		

OVERHEAD 11-22KV CCT CONST. No C21
PIN INSULATOR THROUGH MAINS (DELTA)
SINGLE CROSSARM
WITH OR WITHOUT SURGE ARRESTOR

SUBSTATION DESIGN MANAGER 22.04.09

A2 332026

SHEET No 1 OF 1 SHEETS

AMENDMENTS

JOB No	
DESIGN	R.D
DR'N	K.T
CH'D	R.D
DATE	
APP'D	K.S

C

HISTORY

REVISION A
ORIGINAL ISSUE.

REVISION B
NOTE 2 AMENDED. ITEM IA090 IN TABLE CHANGED TO MA090.

REVISION C
REMOVED CLAH & REPLACED WITH SURGE ARRESTOR.

FRAME_A2.DWG_v12