AMENDMENTS	
A	ORIGINAL ISSUE
Job No.	
B	DESIGN N/A
	DR'N TV
	CH'D MA/MB
	DATE 12.11.25
A.E.M.	S.P.
STOCK CODES UPDATED	

NOTES

1. POLE STEPS ARE REQUIRED TO BE INSTALLED FROM 8.3m ABOVE GROUND LEVEL. WHERE NORMAL VEHICLE ACCESS IS NOT AVAILABLE (OFF ROAD) POLE STEPS WILL BE REQUIRED FROM 6m ABOVE GROUND LEVEL.
2. MAXIMUM DEVIATION ANGLE APPROXIMATELY 25°, VARIES WITH CONDUCTOR TYPE/TENSION AND ULTIMATE MECHANICAL LOADING ON POST INSULATORS.

ITEM	PART/ASSEMBLY NUMBER	DRG Nos.	DESCRIPTION	QTY
1	-	REFER PROJECT	POLE TIMBER	1
2	1000000477	015357	STEP,POLE,WOOD,M16x260MM(L),GALV	A/R
3	ALP001	398035	INSULATOR LINE POST ASSEMBLY	3
4	-	REFER PROJECT	OPGW ASSEMBLY (NOMINAL SHOWN)	1
5	ATP012	054798	INSULATED DOWN LEAD ASSEMBLY	1
6	ATP002	054798	M20 BOLT ASSEMBLY FOR LINE POST INSULATOR	6

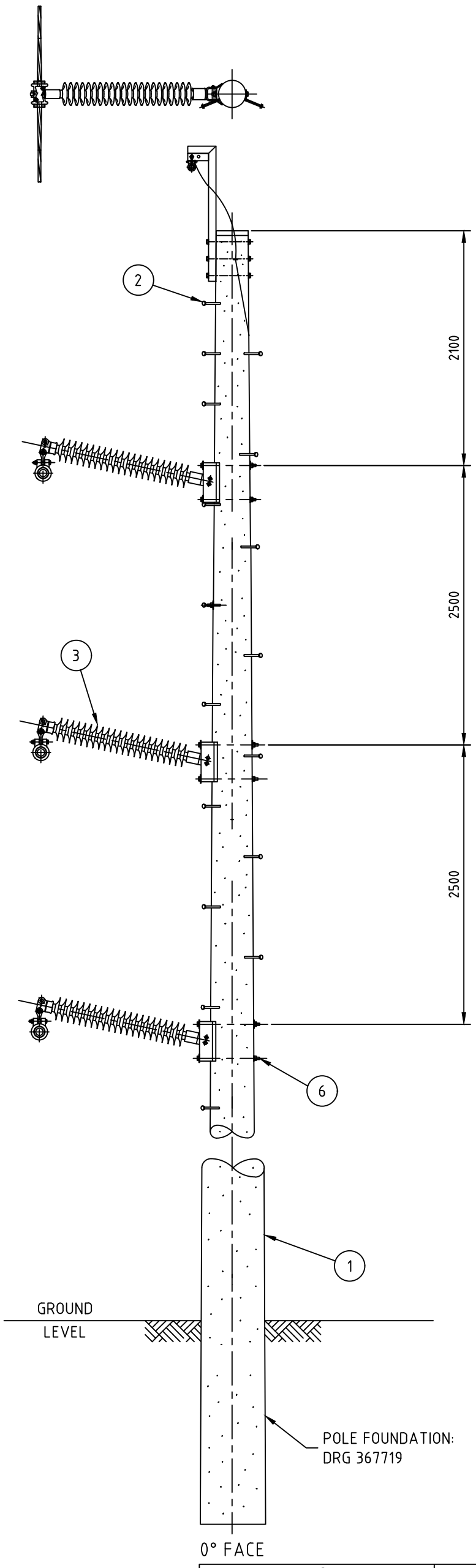

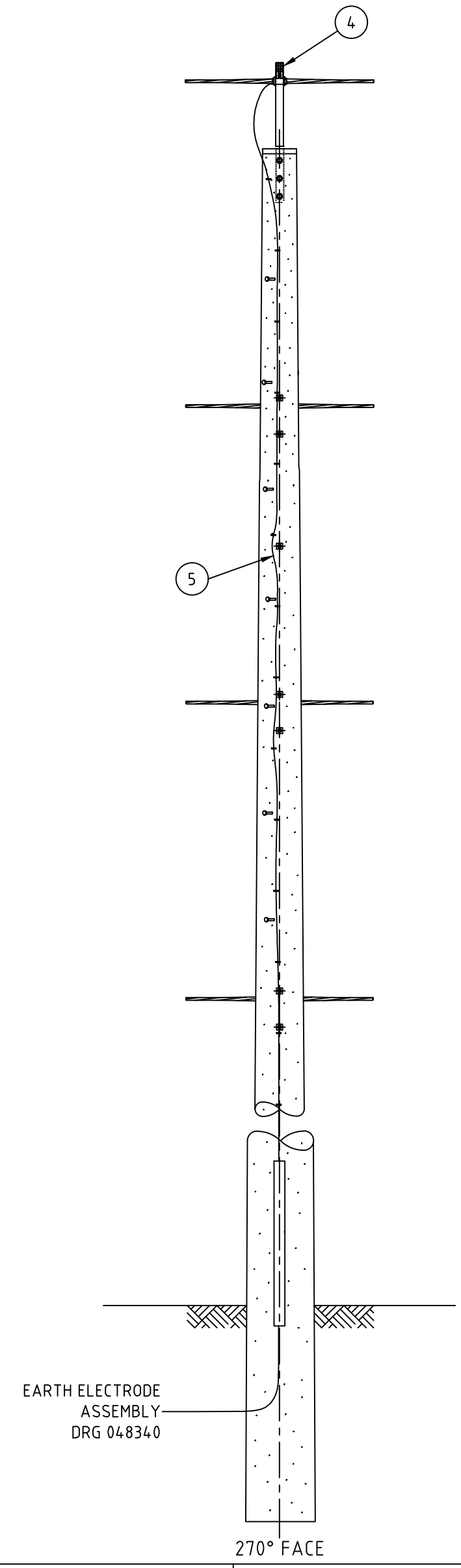

© This drawing and the copyright therein is the property of Endeavour Energy and may not be copied, reproduced, distributed, loaned or used without the written consent of Endeavour Energy.

ORIGINAL SCALE	APPROVED
NTS	S.F.Williams

DRAWN	KT
DATE	29.08.14
CH'D	J.B./R.L.

Endeavour Energy

OVERHEAD TRANSMISSION
132kV CONSTRUCTION No. 82T
VERTICAL LINE POST

REFERENCE DRAWINGS

DO NOT SCALE
DIMENSIONS IN MILLIMETRES

AUTHORISED
D.Mate

NETWORK MAINS MANAGER 31.10.14

A2P 397812 Rev. B

SHEET No 1 OF 1 SHEETS