AMENDMENTS		
A	ORIGINAL ISSUE	
Job No.		
B	DESIGN	N/A
	DR'N	TV
	CH'D	MA/MB
	DATE	12.11.25
A.E.M.	S.P.	
STOCK CODES UPDATED		

NOTES

1. POLE STEPS ARE REQUIRED TO BE INSTALLED FROM 8.3m ABOVE GROUND LEVEL. WHERE NORMAL VEHICLE ACCESS IS NOT AVAILABLE (OFF ROAD) POLE STEPS WILL BE REQUIRED FROM 6m ABOVE GROUND LEVEL.
2. MAXIMUM DEVIATION ANGLE APPROXIMATELY 2°, VARIES WITH CONDUCTOR TYPE/TENSION AND ULTIMATE MECHANICAL LOADING ON POST INSULATORS.

ITEM	PART/ASSEMBLY NUMBER	DRG Nos.	DESCRIPTION	QTY
1	-	REFER PROJECT	POLE TIMBER	1
2	1000000477	015357	STEP,POLE,WOOD,M16x260MM(L),GALV	A/R
3	ALR001	398038	INSULATOR LONG ROD ASSEMBLY	3
4	ALP002	398035	INSULATOR LINE POST ASSEMBLY BONDING	3
5	-	REFER PROJECT	OPGW ASSEMBLY (NOMINAL SHOWN)	1
6	ATP012	054798	INSULATED DOWN LEAD ASSEMBLY	1
7	ATP002	054798	M20 BOLT ASSEMBLY FOR LINE POST INSULATOR	6
8	ATP006	054798	M20 EYEBOLT ASSEMBLY	3

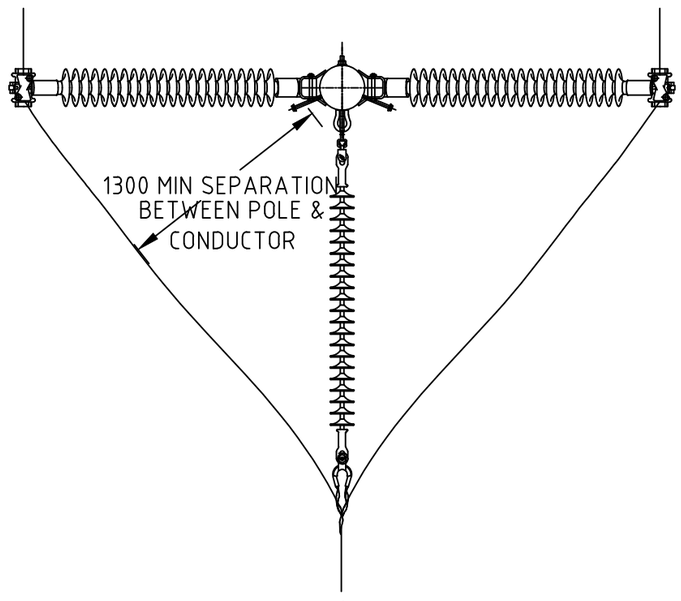

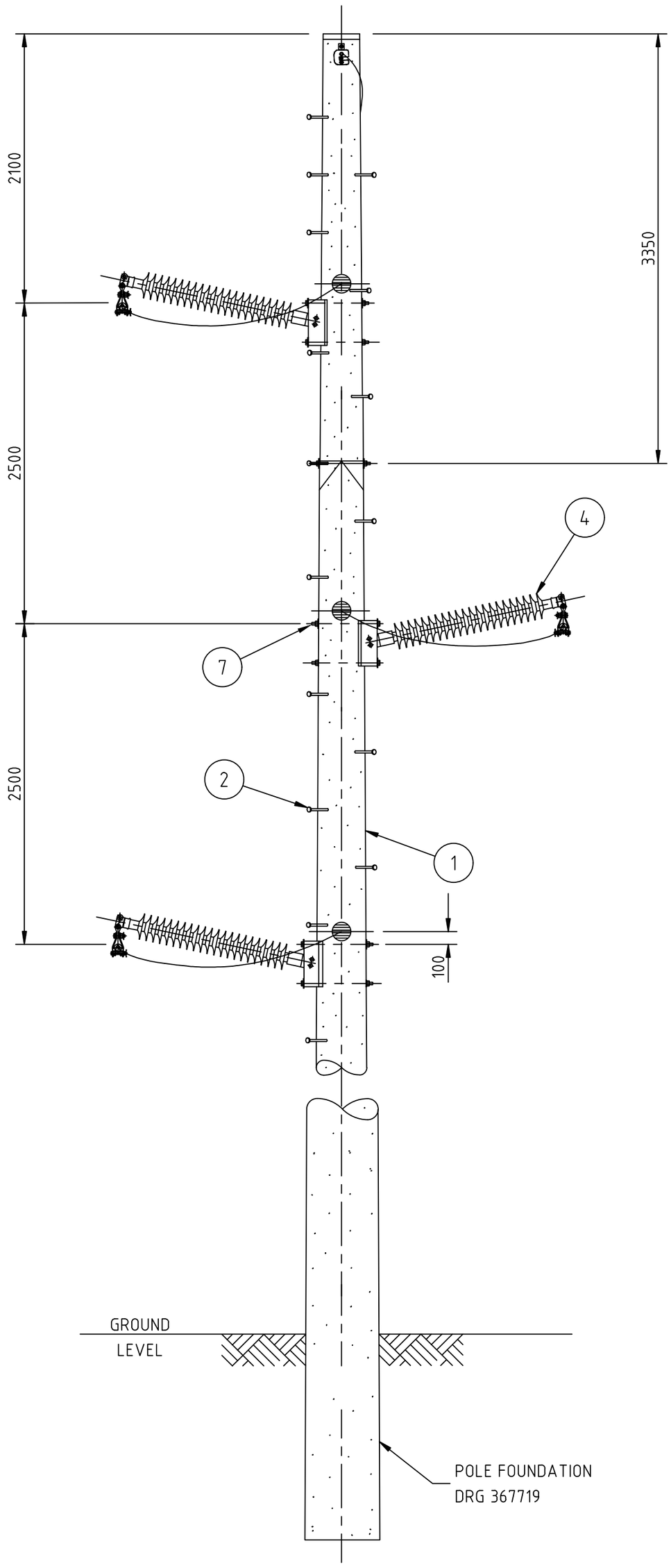

0° FACE

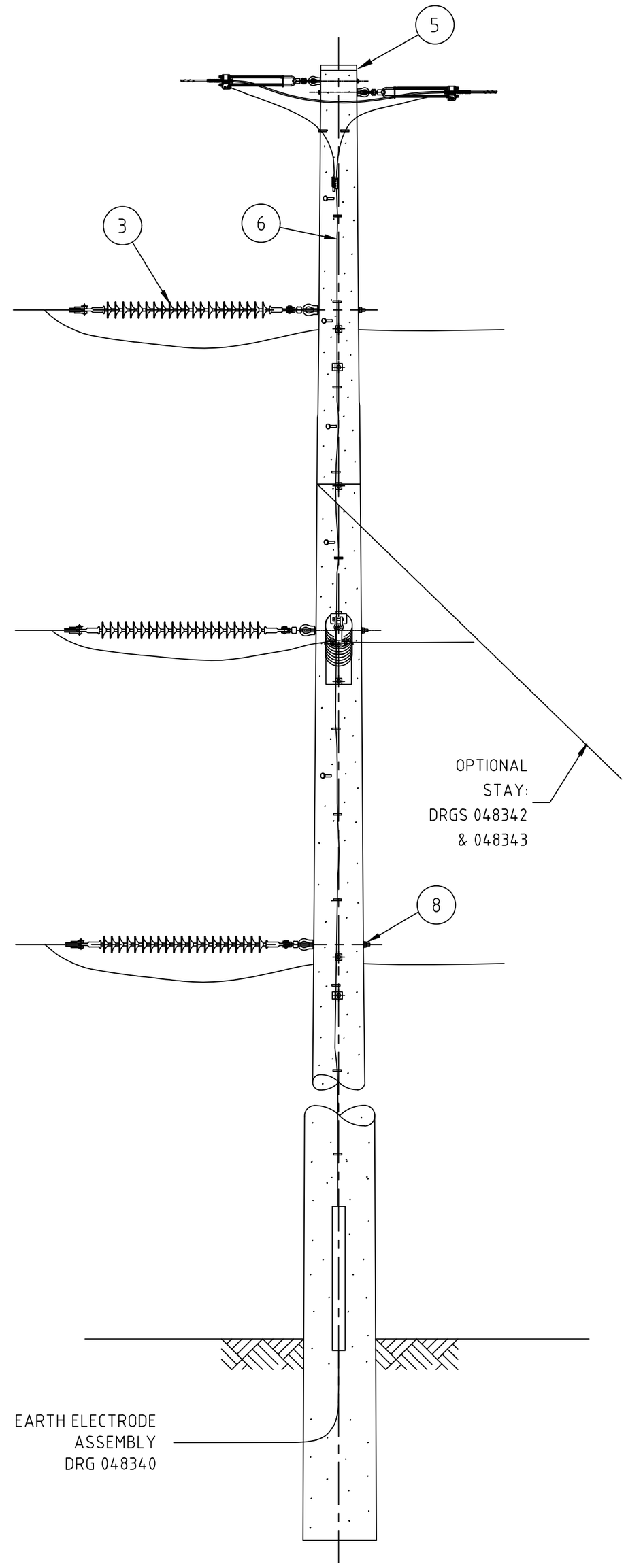

270° FACE

© This drawing and the copyright therein is the property of Endeavour Energy and may not be copied, reproduced, distributed, loaned or used without the written consent of Endeavour Energy.

ORIGINAL SCALE 1:34	APPROVED S.F.Williams		
DRAWN	KT		
DATE	29.08.14		
CH'D	J.B./R.L.		

Endeavour Energy

REFERENCE DRAWINGS

DO NOT SCALE
DIMENSIONS IN MILLIMETRES

AUTHORISED
D.Mate

NETWORK MAINS MANAGER 31.10.14

OVERHEAD TRANSMISSION
132kV CONSTRUCTION No.86VT
VERTICAL TERMINATION

A2P 397816 Rev. B

SHEET No 1 OF 1 SHEETS