MATERIAL LIST

ITEM	STOCKCODE	DRAWING	DESCRIPTION	QTY	REMARKS
1	-	-	372 x 10 x 488 LG STEEL PLATE, GRADE 250	2	
2	-	-	BOLT STEEL HEX HD GALV M20 x 70 LG GRADE 8.8	3	
3	-	-	WASHER STEEL RND FLAT GALV 20	3	
4	-	-	WASHER STEEL SPRING GALV 20	3	
5	-	-	BOLT STEEL HEX HD GALV M16 x 75 LG WITH SPLIT PIN GRADE 8.8	2	
6	-	-	WASHER STEEL RND FLAT GALV 16	2	
7	-	-	WASHER STEEL SPRING GALV 20	2	
8	-	-	TWISTED EYE TONGUE GALV 120KN-PLP PART TET-120-1	2	
9	-	-	AGS CLAMP TO SUIT CONDUCTOR	2	
10	-	-	SAGLINK 160KN 236-350mm PLP DRAWING NO: A2-H-131809-01	1	
11	-	-	132KV LONG ROD 120KN	1	
12	-	-	D SHACKLE 160KN	1	
13	-	-	EYE BOLT ASSY M20 X LENGTH AS REQUIRED WITH WASHER AND NUT	1	

NOTES

1. ALL WORKMANSHIP AND MATERIALS SHALL BE IN ACCORDANCE WITH AS4100.
2. PRIOR TO GALVANISING THE NUMBER 502043 IS TO BE STAMPED IN 12mm HIGH LETTERS WHERE SHOWN AND IS TO BE VISIBLE AFTER GALVANISING.
3. FINISH: AFTER FABRICATION BRACKET TO BE HOT DIP GALVANISED IN ACCORDANCE WITH AS/NZS 4680.

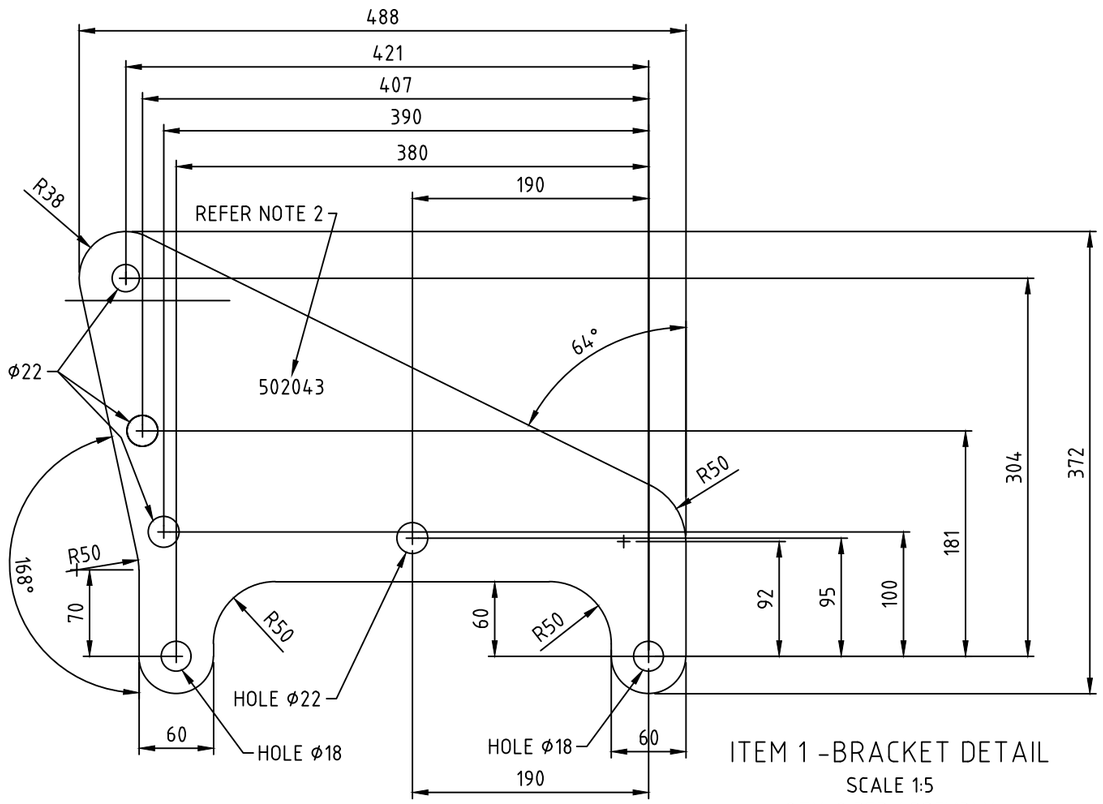

ITEM 1 -BRACKET DETAIL
SCALE 1:5
QTY: 2 PER ASSEMBLY

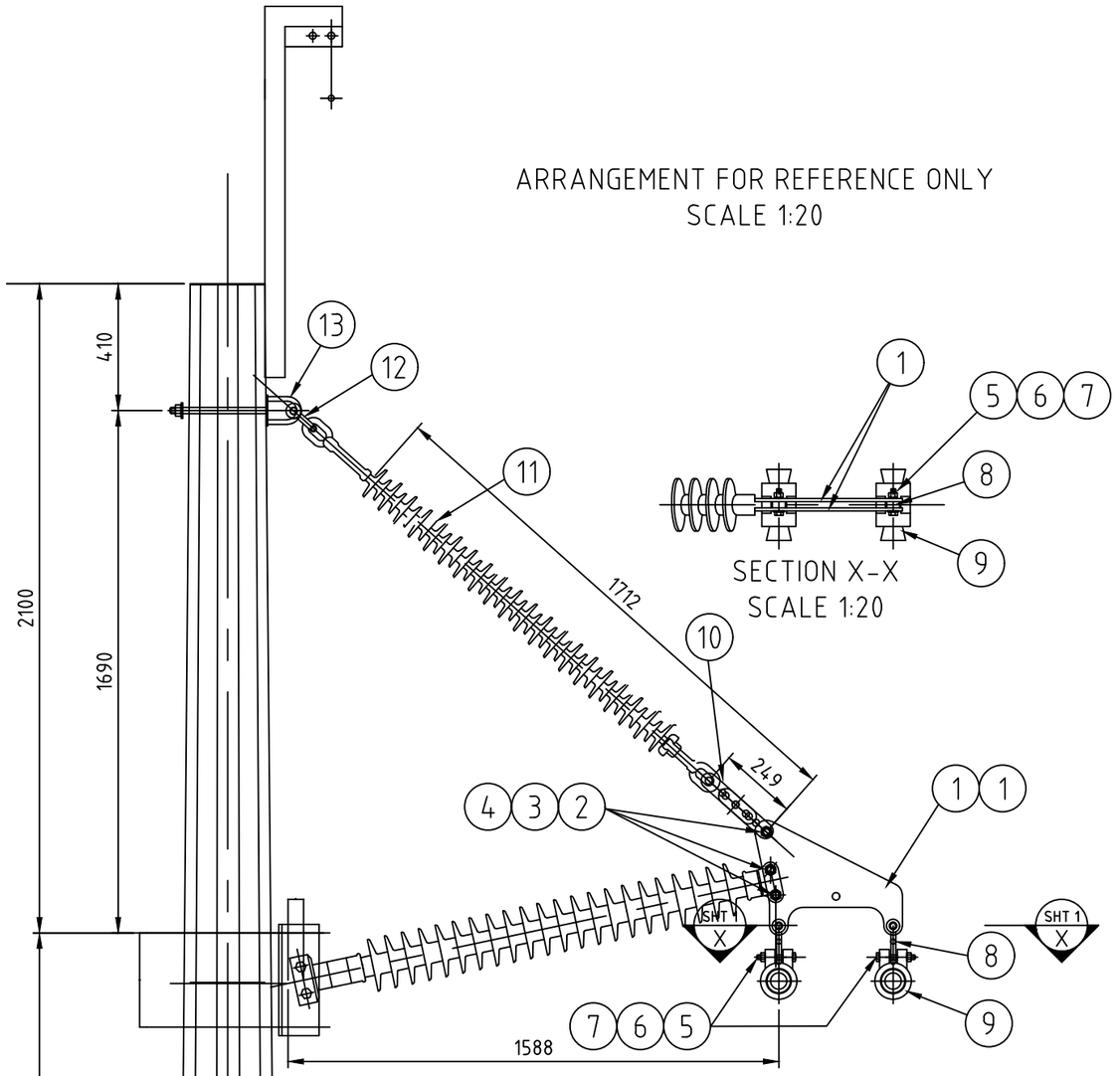

ARRANGEMENT FOR REFERENCE ONLY
SCALE 1:20

SECTION X-X
SCALE 1:20

© This drawing and the copyright therein is the property of Endeavour Energy and may not be copied, reproduced, distributed, loaned or used without the written consent of Endeavour Energy.

Endeavour Energy

AMENDMENTS			
A	ORIGINAL ISSUE		
B	JR No.		
	DESIGN	M.A	
	DR'N	M.A	
	CH'D	C.P	
	DATE	14/9/20	
	S/ENG	M Azimi	
	MCDM	B HAM	
	CONNECTION CHANGED TO EYE BOLT. SAG LINK ADDED		
C	DESIGN	N/A	
	DR'N	TV	
	CH'D	MA/MB	
	DATE	15.12.25	
	A.E.M	S.P.	
	NO CHANGE		

ORIGINAL SCALE		APPROVED M. AZIMI	
DESIGNED	CP	CH'D	A.W.
DRAWN	CP		
DATE	6/5/16		

REFERENCE DRAWINGS

DO NOT SCALE
DIMENSIONS IN MILLIMETRES

AUTHORISED
S.F. WILLIAMS for D. ASVESTA

MANAGER ASSET STANDARDS AND DESIGN | 9/5/2016

OVERHEAD TRANSMISSION
132KV HORIZONTAL V STRING
SUSPENSION BUNDLED CONDUCTOR
BRACKET DETAIL

A3 | 502043 | Rev. C

SHEET No 1 OF 1 SHEETS