AMENDMENTS		
A	ORIGINAL ISSUE	
	Job No.	N/A
B	DR'N	DG
	CH'D	CP
	DATE	5/6/24
	JR No	--
DISTRIBUTION PANEL REMOVED, LVABC ADDED INCLUDING REFERENCE TO NEW NOTE 7 ON SHEET 1 CENTRALISED PROT. RELAY ADDED SH2.		
EDM		KS
C	DR'N	DG
	CH'D	CP
	DATE	5/9/24
	JR No	--
EARTHING DETAILS CHANGED ON BOTH SH1&2. CENTRALISED PROTECTION RELAY REMOVED SH2.		
EDM		KS

NOTES

1). LV EARTH MUST NOT BE DISCONNECTED WHILST THE ECO STORE IS ENERGISED
2). EARTHING CONSTRUCTION TO COMPLY WITH EARTHING CONSTRUCTION STANDARD EDI0006 AND THIS DRAWING.
3). INSTALL MINIMUM 6MM2 INSULATED CU EARTH CABLE TO LV EARTH BAR IN MAIN SWITCHBOARD FOR ALL EARTHING CONNECTIONS. INSULATE/SEAL ALL EXPOSED CONDUCTOR JOINTS AND LUGS WITH LV HEAT SHRINK REF DRG 332002.
4). MINIMUM SEPARATION TO HV ELECTRODE AND LV ELECTRODE TO BE NOT LESS THAN 4M OR DETERMINED IN AN EARTHING DESIGN.
5). THE 25MM FLEXIBLE CABLES SUPPLIED WITH THE BESS UNIT MUST BE TERMINATED WITH APPROPRIATE CRIMP FERRULES.

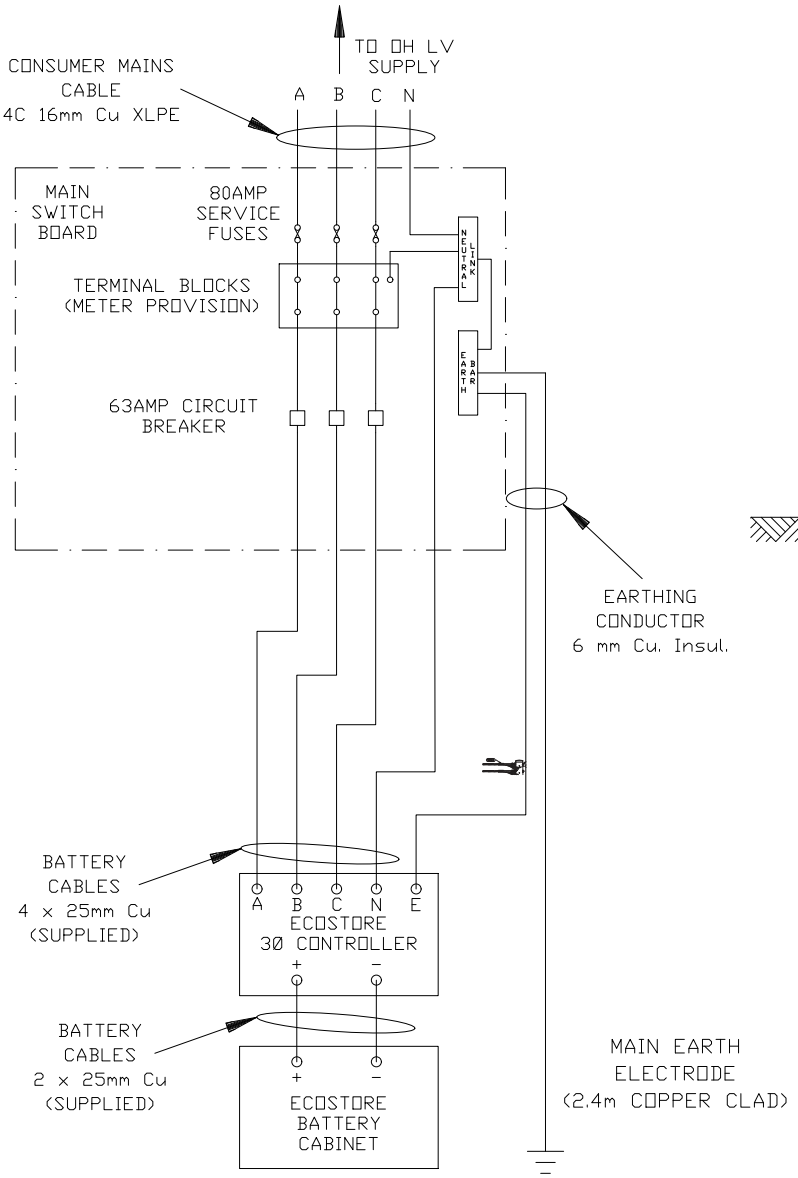

CIRCUIT DIAGRAM
ECOSTORE V2

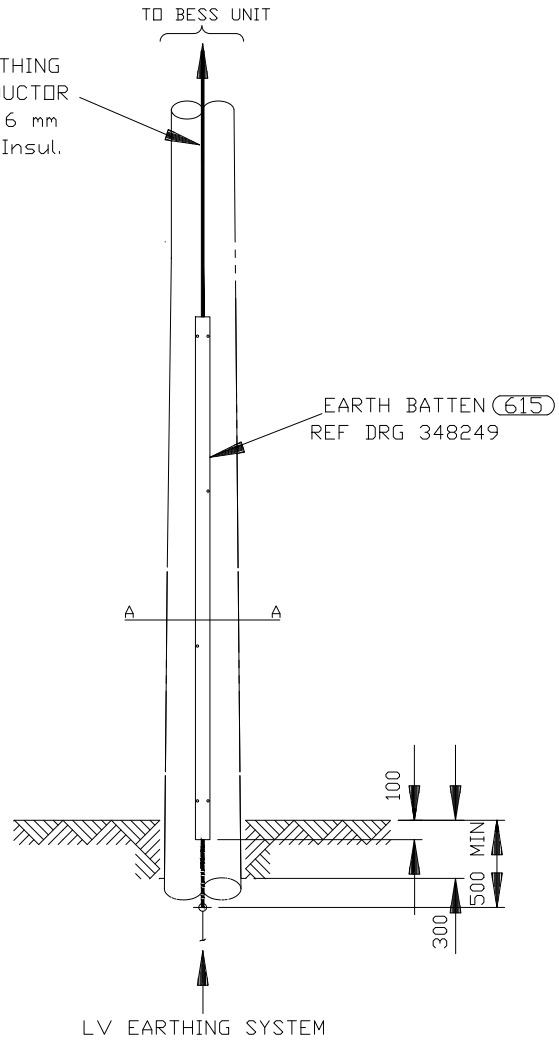

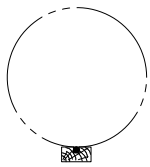

SECTION AA

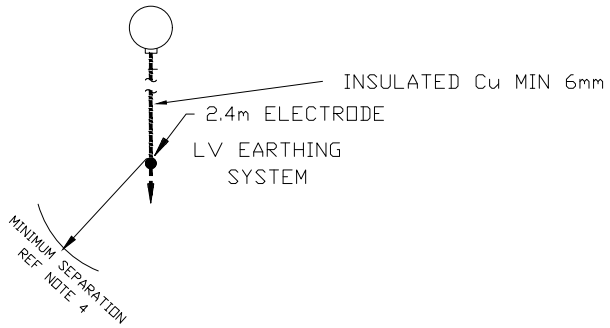

© This drawing and the copyright therein is the property of Endeavour Energy and may not be copied, reproduced, distributed, loaned or used without the written consent of Endeavour Energy.

ORIGINAL SCALE N.T.S	APPROVED A.W		
DRAWN	DG		
DATE	26-09-2023		
CH'D	R.D		

Endeavour Energy

REFERENCE DRAWINGS

DO NOT SCALE
DIMENSIONS IN MILLIMETRES

AUTHORISED
K. SHANAHAN

ECOJOULE - ECOSTORE V2 POLE BATTERY UNIT
CONSTRUCTION, ELECTRICAL & EARTHING ARRANGEMENT
(NON METERED - NETWORK BATTERY)

ENGINEERING DELIVERY MANAGER 28-09-2023

A2P 531471 Rev. C

SHEET No 2 OF 2 SHEETS